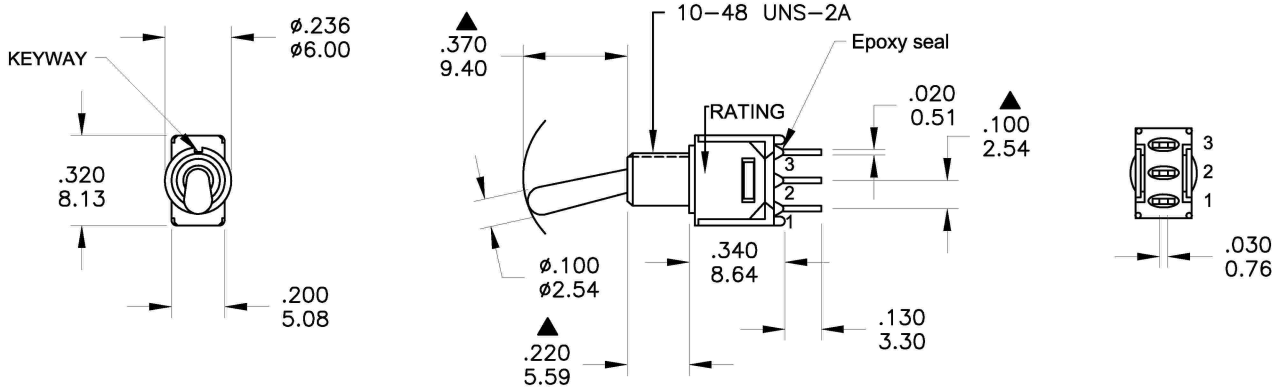

Model No.	POS.1	POS.2	POS.3
2MS1	ON	NONE	ON
Term. Comm.	2-3	OPEN	2-1
SCHEMATIC	1 2 Comm. 3		1 2 Comm. 3

SWITCH FUNCTION

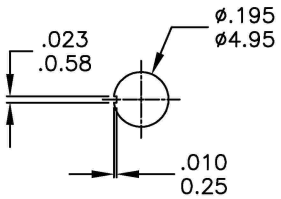

Without locking ring.

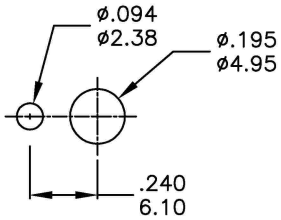

With standard locking ring.

PANEL MOUNTING

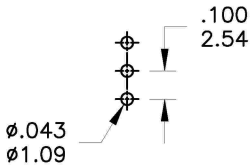

P.C. MOUNTING

SPECIFICATIONS

MECHANICAL LIFE: 30,000 make-and-break cycles.
CONTACT RESISTANCE: 20mΩmax. initial @ 2-4VDC
100mA for both silver and gold plated contacts.
INSULATION RESISTANCE: 1,000MΩmin.
DIELETRIC STRENGTH: 1,000 V RMS@sea level.
OPERATING TEMPERATURE: -30°C to 85°C.

MATERIALS

CASE - Diallyl phthalate(DAP)(UL94V-0)
ACTUATOR - Brass,chrome plated
BUSHING - Brass,nickel plated
HOUSING - Stainless Steel
SWITCH SUPPORT - Brass,tin plated.
TERMINALS/CONTACT - Brass, with Silver or gold plated.

RATING :
R : 0.4 Volt-Amps(VA) max. @20V max.(AC or DC)
Q : 1Amp @250VAC
3Amps @120 VAC or 28 VDC

COSLAND CO.,LTD.
E-MAIL: cosland@cosland.com
TEL:886-2-2745 8908. FAX:886-2-2765 3456.

	符號	原尺寸	修改後尺寸	變更日期
1	Ⓐ			
2	Ⓑ			
3	Ⓒ			
4	Ⓓ			
5	Ⓔ			

SCALE (比例) : 3 : 2
TOLERANCE (公差) :
0.00 mm ± 0.25mm
0.0 mm ± 0.40mm
ANGULAR : ± 5°
FILE NAME : 2MSP0324

TITLE 圖 名	Sub - Miniature Toggle Switches			SIZE 圖紙	A4
DWG NO. 圖 號	2MS1T1B4M2QES			UNIT 單位	inch mm
REV. 版本	A	DATE 日 期	JUL - 24 - 2006	SHEET 張 數	1 of 1
CHECKED BY 審 核	RICHARD		DRAWN BY 製 圖	ODA	