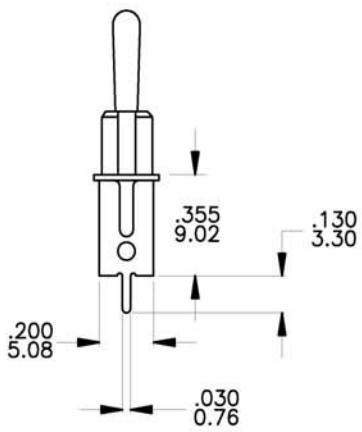

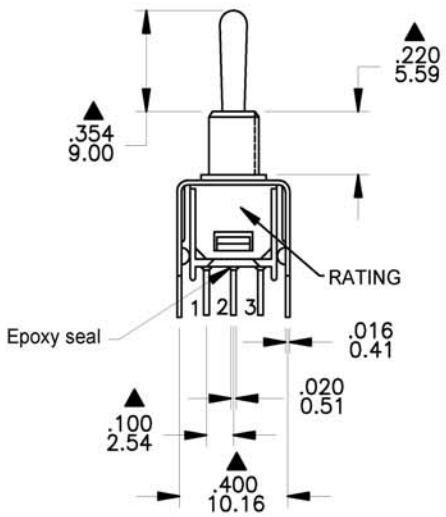

P.C. MOUNTING

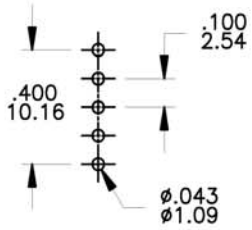

Model No.	POS.1	POS.2	POS.3
2MS1	ON	NONE	ON
Term. Comm.	2-3	OPEN	2-1
SCHEMATIC	1 2 Comm. 3		1 2 Comm. 3

SWITCH FUNCTION

SPECIFICATIONS

MECHANICAL LIFE: 30,000 make-and-break cycles.
CONTACT RESISTANCE: 20mΩmax. initial @ 2-4VDC
100mA for both silver and gold plated contacts.
INSULATION RESISTANCE: 1,000MΩmin.
DIELETRIC STRENGTH: 1,000 V RMS@sea level.
OPERATING TEMPERATURE: -30°C to 85°C.

MATERIALS

CASE - Dially phthalate(DAP)(UL94V-0)
ACTUATOR - Brass,chrome plated
BUSHING - Brass,nickel plated
HOUSING - Stainless Steel
SWITCH SUPPORT - Brass,tin plated.
TERMINALS/CONTACT - Brass, with Silver or gold plated.
RoHS: 2002/95/EC

	CONTACT MATERIAL	TERMINAL PLATING	RATINGS
Q	Silver	Q = Silver	3 Amps @120 VAC or 28 VDC 1 Amps @250VAC
S		S = Silver,pure-tin	
C	Gold over Silver	C = Gold over silver	
K		K = Gold over silver,pure-tin	
R	Gold	R = Gold	0.4 Volt-Amps(VA) max. @20V max. (AC or DC)
G		G = Gold,pure-tin	

COSLAND CO.,LTD.
E-mail: cosland@cosland.com

	符號	原尺寸	修改後尺寸	變更日期
1	Ⓐ			
2	Ⓑ			
3	Ⓒ			
4	Ⓓ			
5	Ⓔ			

SCALE (比例): 3 : 2

TOLERANCE (公差):
0.00 mm ± 0.25mm
0.0 mm ± 0.40mm
ANGULAR : ± 5°
FILE NAME : 2MSP0344

TITLE 圖名	Sub - Miniature Toggle Switches	SIZE 圖紙	A4
DWG NO. 圖號	2MS1T1B4VS2QES	UNIT 單位	inch mm
REV. 版本	A	DATE 日期	AUG - 23 - 2006
SHEET 張數	1 of 1		
CHECKED BY 審核	RICHARD	DRAWN BY 製圖	ODA