参考資料

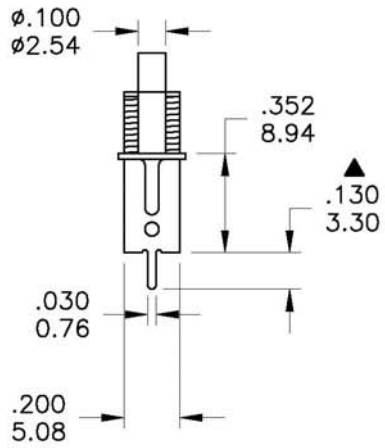

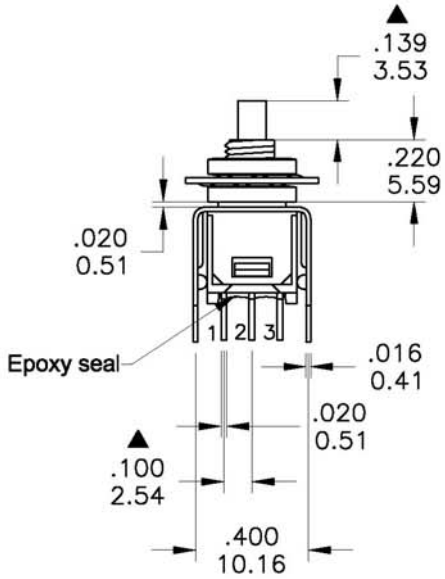

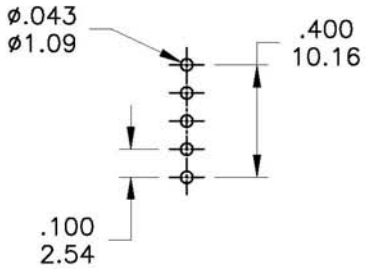

P.C. MOUNTING

Model No.	POS.1	POS.2
8MS8	ON	MOM
Term. Comm.	2-1	2-3
SCHEMATIC	1 NC, 2 Comm., 3 NO	1 NC, 2 Comm., 3 NO

SWITCH FUNCTION

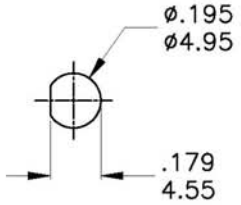

PANEL MOUNTING

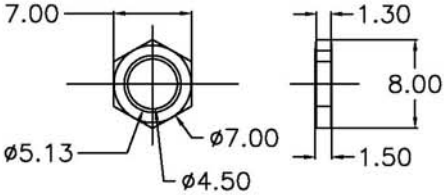

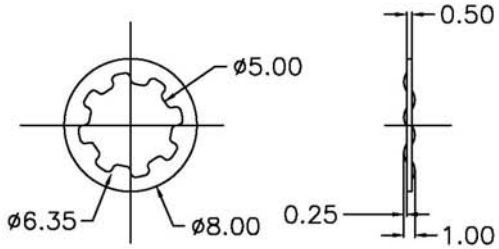

SPECIFICATIONS

MECHANICAL LIFE: 60,000 make-and-break cycles.
CONTACT RESISTANCE: 20mΩmax. initial @ 2-4VDC
100mA for both silver and gold plated contacts.
INSULATION RESISTANCE: 1,000MΩmin.
DIELETRIC STRENGTH: 1,000 V RMS@sea level.
OPERATING TEMPERATURE: -30°C to 85°C.

MATERIALS

CASE - Diallyl phthalate(DAP)(UL94V-0)
PLUNGER - Thermoplastic Polyester-black
BUSHING - Brass,nickel plated
HOUSING - Stainless Steel
CONTACT - Sliver or gold plated.
TERMINAL - Brass,silver plated.
TERMINAL SUPPORT - Brass, electrotin plated.
ROHS : 2002/95/EC

RATING :
R : 0.4 Volt-Amps(VA) max. @20V max.(AC or DC)
Q : 1Amp @250VAC
3Amps @120 VAC or 28 VDC

COSLAND CO.,LTD.
E-MAIL: cosland@cosland.com

	符號	原尺寸	修改後尺寸	變更日期
1	Ⓐ			
2	Ⓑ			
3	Ⓒ			
4	Ⓓ			
5	Ⓔ			

SCALE (比例) : 3 : 2
TOLERANCE (公差) :
0.00 mm ± 0.25mm
0.0 mm ± 0.40mm
ANGULAR : ± 2.54 mm
FILE NAME : 8MSP0340

TITLE 圖名	Sub - Miniature Pushbutton Switches			SIZE 圖紙	A4
DWG NO. 圖號	8MS8P1B05VS2QES-1			UNIT 單位	inch mm
REV. 版本	A	DATE 日期	SEP - 20 - 2007	SHEET 張數	1 of 1
CHECKED BY 審核			DRAWN BY 製圖	ERIN	