OptoSupply
Light It Up

Deluxe Power Super Flux Yellow LED

OS5YKAZ2C1P

■Features

- High Luminous Super Flux Output
- 5 ø Standard Directivity
- Superior Weather-resistance
- UV Resistant Epoxy
- Water Clear Type

■Applications

- Traffic Signal
- Backlighting
- Signal and channel letter
- Other Lighting

■Outline Dimension

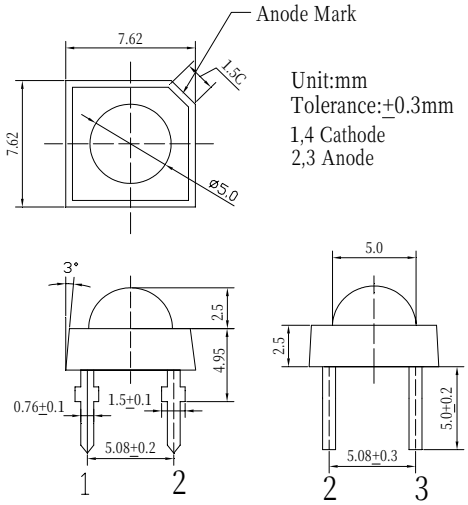

■Absolute Maximum Rating (Ta=25℃)

Item	Symbol	Value	Unit
DC Forward Current	I_F	70	mA
Pulse Forward Current*	I_{FP}	120	mA
Reverse Voltage	V_R	5	V
Power Dissipation	P_D	182	mW
Operating Temperature	Topr	-30 ~ +85	℃
Storage Temperature	Tstg	-40 ~ +100	℃
Lead Soldering Temperature	Tsol	260℃/5sec	-

*Pulse width Max.10ms Duty ratio max 1/10

■Directivity

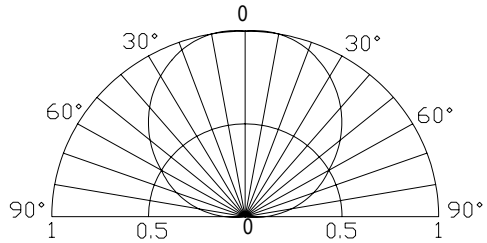

■Electrical -Optical Characteristics (Ta=25℃)

Item	Symbol	Condition	Min.	Typ.	Max.	Unit
DC Forward Voltage	V_F	I_F=70mA	2.0	2.3	2.6	V
DC Reverse Current	I_R	V_R=5V	-	-	10	μA
Domi. Wavelength*	λ_D	I_F=70mA	585	590	595	nm
Luminous Intensity*	Iv	I_F=70mA	8400	10000	-	mcd
50% Power Angle	$2\theta_{1/2}$	I_F=70mA	-	120	-	deg

*1 Tolerance of dominant wavelength is ±1nm

*2 Tolerance of luminous intensity is ±15%

■Maximum Forward DC Current

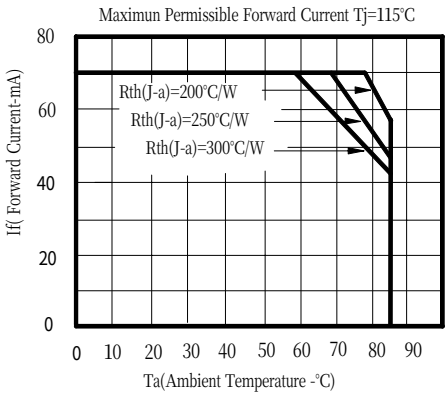

LED & Application Technologies

ATTENTION
OBSERVE PRECAUTIONS
ELECTROSTATIC
SENSITIVE DEVICES